Panasonic

AI ECO



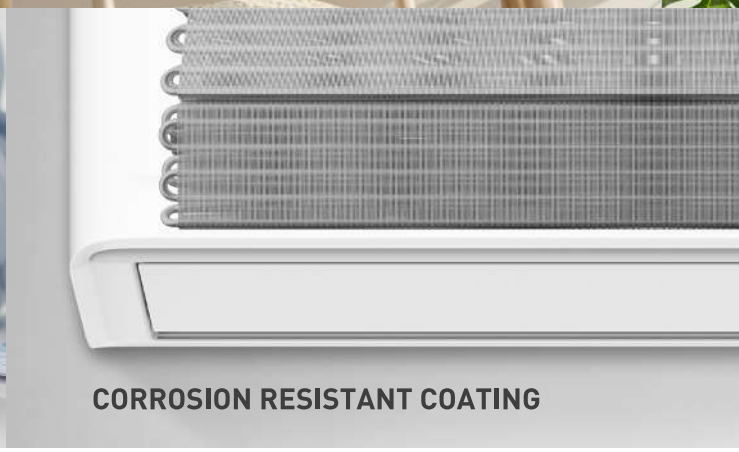

CORROSION RESISTANT COATING

Residential Air Conditioners

ECO+ INVERTER (BU)

JAPAN QUALITY
TRUSTED FOR OVER 100 YEARS

AI ECO INVERTER POWERFUL AEROWINGS

BEYOND THE COOL

Scan here to learn more

ENERGY EFFICIENCY



*1 Comparison of ECO Mode & normal mode by using 1.5HP Inverter Model.
*2 Applicable for 2.0HP ECO+ Inverter only. Average energy consumption per year is based on the value stated on the MEPS label 2026. Daily costs are calculated assuming 8 hours of daily use at an electricity tariff of RM0.2703/kWh.

COMFORT



*1 Comparison of POWERFUL mode & normal cool mode by using 1.5HP Inverter Model. *2 Applicable to CS-BU18DKH-1 & CS-BU24DKH-1. *3 Applicable to CS-BU9DKH-1 & CS-BU12DKH-1.

CONTROL



CONNECTIVITY



ALL-WEATHER RELIABILITY



*Tested beyond industrial IEC standard of 11,000v.

ANTI-CORROSION PROTECTION

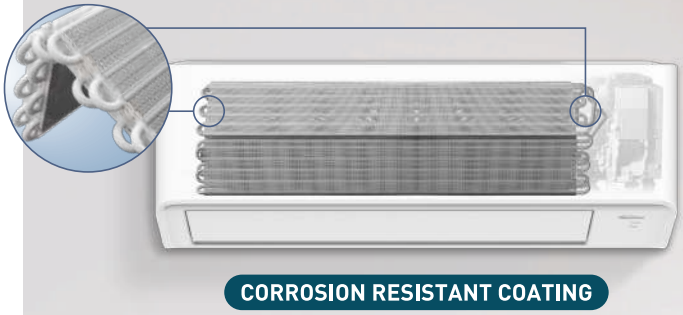

The newly applied polymer coating on both sides of the U-shaped indoor evaporator's copper tubes provide enhanced defense against indoor contaminants - preventing corrosion, potential gas leakages and rust.

- **Indoor Corrosion caused by:**

High Humidity (moisture in the air)

Coastal Air (salt in the air)

Corrosive Environment (exposure to harsh chemicals)

*Based on Internal Panasonic laboratory testing. Results may vary depending on usage and environmental factors.

BUILT FOR DURABILITY

BLUE FIN CONDENSER

Extend the condenser's lifespan with a corrosion-resistant shield that protects it from corrosive elements like water, salt and air contaminants.

- LONGER LIFESPAN AND PERFORMANCE
- WITHSTAND HARSH ENVIRONMENT
- IDEAL FOR COASTAL AND HIGH-HUMIDITY AREAS

SGS-CERTIFIED 2,000 HOURS NEUTRAL SALT SPRAY TEST*





Water-Resistant PCB
Protects the brain of your air conditioner, extending its durability.



Water-resistant resin coating



Copper Tube

*Salt spray test result 2,000hr was conducted using bluefin aluminum foil under controlled lab conditions (JIS Z 2371:2015). Actual product performance depends on environment and usage.

SPECIFICATION

CS-BU9DKH-1 | CS-BU12DKH-1



CS-BU18DKH-1 | CS-BU24DKH-1





Wireless (Standard)



Wired CZ-RD517C (Optional)



Network Adaptor CZ-TACG1 (Optional)

AI ECO | INVERTER | POWERFUL | BIG FLAP (CS-BU9/12DKH-1) | AEROWINGS (CS-BU18/24DKH-1)

Comfort Cloud (Optional Network Adaptor)

MODEL	INDOOR UNIT (50Hz)		CS-BU9DKH-1	CS-BU12DKH-1	CS-BU18DKH-1	CS-BU24DKH-1
	OUTDOOR UNIT		CU-BU9DKH-1	CU-BU12DKH-1	CU-BU18DKH-1	CU-BU24DKH-1
Cooling Capacity	(min-max)	kW	2.65 (1.00-3.10)	3.52 (1.15-3.75)	5.30 (1.30-6.00)	6.80 (1.50-7.04)
	(min-max)	Btu/h	9,040 (3,410-10,600)	12,000 (3,920-12,800)	18,100 (4,430-20,500)	23,200 (5,120-24,000)
EER	(min-max)	Btu/hW	12.05 (14.21-11.78)	11.21 (15.08-11.13)	11.68 (13.84-11.20)	11.90 (14.63-11.43)
	(min-max)	W/W	3.53 (4.17-3.44)	3.29 (4.42-3.26)	3.42 (4.06-3.28)	3.49 (4.29-3.35)
CSPF		W/W	5.18 (3★)	5.22 (3★)	5.95 (5★)	5.39 (4★)
Electrical Data	Voltage	V	220-240	220-240	220-240	220-240
	Current	A	3.50 - 3.20	4.90 - 4.50	7.10 - 6.50	9.00 - 8.20
	Power Input (min-max)	W	750 (240-900)	1,070 (260-1,150)	1,550 (320-1,830)	1,950 (350-2,100)
Moisture Removal		L/h	1.6	2.0	2.9	3.9
		Pt/h	3.4	4.2	6.1	8.2
Air Circulation	Indoor	m^3/min (ft^3/min)	10.3 (365)	11.0 (390)	19.3 (680)	19.9 (700)
	Outdoor	m^3/min (ft^3/min)	26.7 (940)	27.6 (975)	39.3 (1,390)	34.9 (1,230)
Noise Level	Indoor (H / L / Q-Lo)	dB (A)	38/26/21	40/28/21	44/32/28	45/34/28
	Outdoor (H)	dB (A)	48	51	52	53
Dimensions Indoor (Outdoor)	Height	mm	290 (511)	290 (511)	295 (619)	295 (619)
		inch	11-7/16 (20-1/8)	11-7/16 (20-1/8)	11-5/8 (24-3/8)	11-5/8 (24-3/8)
	Width	mm	765 (650)	765 (650)	1,060 (824)	1,060 (824)
		inch	30-1/8 (25-19/32)	30-1/8 (25-19/32)	41-3/4 (32-15/32)	41-3/4 (32-15/32)
	Depth	mm	214 (230)	214 (230)	249 (299)	249 (299)
		inch	8-7/16 (9-1/16)	8-7/16 (9-1/16)	9-13/16 (11-25/32)	9-13/16 (11-25/32)
Net Weight	Indoor	kg (lb)	8 (18)	8 (18)	12 (26)	12 (26)
	Outdoor	kg (lb)	17 (37)	17 (37)	29 (64)	31 (68)
Refrigerant Pipe Diameter	Liquid Side	mm	ø 6.35	ø 6.35	ø 6.35	ø 6.35
		inch	1/4	1/4	1/4	1/4
	Gas Side	mm	ø 9.52	ø 9.52	ø 12.70	ø 12.70
		inch	3/8	3/8	1/2	1/2
Pipe Extension	Chargeless Pipe Length	m	7.5	7.5	10.0	10.0
	Maximum Pipe Length	m	20	20	30	30
	Maximum Elevation Length	m	15	15	20	20
	Additional Refrigerant Gas*	g/m	10	10	15	15
Power Supply			Indoor	Indoor	Indoor	Indoor

*When pipes are not extended from the chargeless pipe length, the required amount of refrigerant is already in the unit.

DIMENSIONS

Indoor Units (mm)

CS-BU9DKH-1 | CS-BU12DKH-1

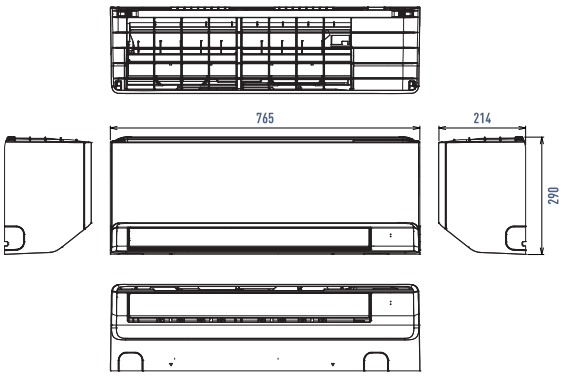

CS-BU18DKH-1 | CS-BU24DKH-1

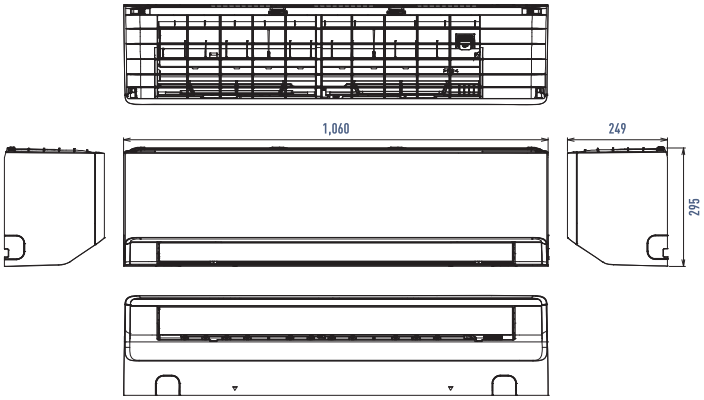

Outdoor Units (mm)

CU-BU9DKH-1 | CU-BU12DKH-1

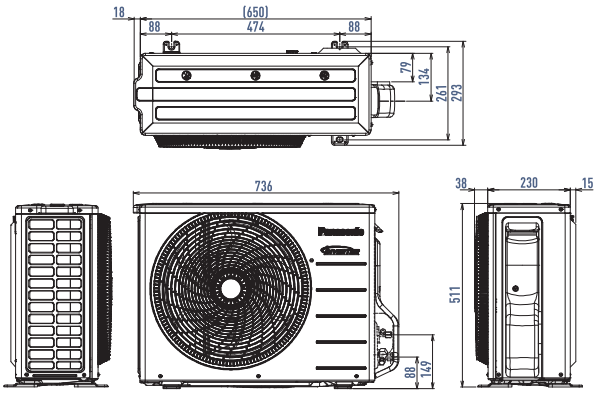

CU-BU18DKH-1 | CU-BU24DKH-1

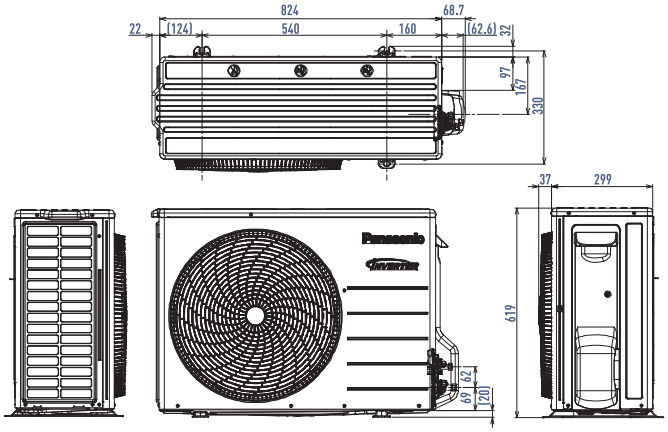

EASY INSTALLATION & SERVICING

Panasonic constantly improves the design of its air conditioners to simplify installation and servicing, enhancing work efficiency while reducing downtime.



FRONT GRILLE
Remove one screw, and two slider locks at the front and on top.



DRAIN HOSE
Smooth and secure drain hose connection with lock.



CROSS FLOW FAN
Better work efficiency without lifting the evaporator.

25s SPEEDY FRONT GRILLE REMOVAL

- Please read the Installation Instructions carefully before installing the unit, and the Operating Instructions before using it.
- Specifications are subject to change without prior notice.
- The contents of this catalogue are accurate as of September 2026.
- Due to printing considerations, actual colours may vary slightly from those shown.
- All graphics are provided solely for the purpose of illustrating a point.

Do not add or replace refrigerant other than the specified type. Manufacturer is not responsible for damage or deterioration in safety due to usage of other refrigerant.

Authorised Dealer

Panasonic Air-Conditioning Malaysia (PACMY)
A Division Company of Panasonic Malaysia Sdn. Bhd.
Registration No. 197601000977 (26975-W)

Customer Care Center
Lot 10, Jalan 13/2, 46200 Petaling Jaya, Selangor Darul Ehsan.
Tel: +603-7932 4189 Fax: +603-7932 4181
Email: aircon.cs@my.panasonic.com
Website: www.panasonic.com/my/